PJ Open Frame Power Supply
12V 50W 1 Phase / PJ-12V50W□NA

PJ

Highlights & Features

- Universal AC input voltage range (85Vac – 264Vac)
- Low Inrush Current / Low Leakage Current
- High efficiency and PF factor to conserve energy
- Conforms to harmonic current IEC/EN 61000-3-2, Class A
- Conformal coating on PCBA to protect against chemical and dust pollutants
- Versatile configuration options: Open Frame, L Frame, Enclosed
- Long life capacitors

Safety Standards

CB Certified for worldwide use

Model Number: PJ-12V50W□NA

Unit Weight: **Open Frame**: 0.16 kg (0.35 lb)
Enclosed: 0.28 kg (0.62 lb)

Dimensions (L x W x D): **Open Frame**:
132 x 50 x 26.6 mm
(5.19 x 1.96 x 1.05 inch)
Enclosed:
162 x 60 x 36 mm
(6.37 x 2.36 x 1.41 inch)

General Description

The PJ series of Open Frame Power Supply comes with universal AC input at 85Vac to 264Vac. Other features include low leakage / Inrush current and conformal coating on the PCBAs to provide protection against dust and chemical pollutants. The built-in active PFC provides PF > 0.97 and fulfills Harmonic Current Emission according to IEC/EN 61000-3-2. The PJ series is certified for EMC standards according to EN 55011 for industrial, scientific and medical (ISM) radio-frequency equipment and EN 55022 for Industrial Technology Equipment (ITE) radio-frequency equipment and EMS according to EN 55024. In addition, the detachable input and output connectors are from JST and only recognized Japanese capacitors are used.

Metal chassis and case cover are available as options for different installation preferences. The PJ series conforms to major international safety standards according to EN/UL 60950-1 standards and are fully compliant with RoHS Directive 2011/65/EU for environmental protection.

Model Information

PJ Open Frame Power Supply

Model Number	Input Voltage Range	Output Voltage	Output Current
PJ-12V50W□NA	85-264Vac	12Vdc	4.30A

Model Numbering

				CC Code	
PJ –	**12V**	**50W**	**□**	**N**	**A**
PJ Series	Output Voltage	Output Power	Product Type B - Open Frame L - L Frame C - Enclosed	Remote ON/OFF Function N - No Remote ON/OFF	Delta Standard

All parameters are specified at 25°C ambient and AC input unless otherwise indicated.
www.DeltaPSU.com (November 2018, Rev. 03)

PJ Open Frame Power Supply
12V 50W 1 Phase / PJ-12V50W□NA

Specifications

Input Ratings / Characteristics

Nominal Input Voltage	100-240Vac
Input Voltage Range	85-264Vac
Nominal Input Frequency	50-60Hz
Input Frequency Range	47-63Hz
Input Current	0.65A typ. @ 100Vac, 0.35A typ. @ 200Vac
Efficiency at 100% Load	83.0% typ. @ 100Vac, 85.0% typ. @ 200Vac
Max Inrush Current (Cold Start)	15A typ. @ 100Vac, 30A typ. @ 200Vac
Power Factor Correction	0.98 typ. @ 100Vac, 0.97 typ. @ 200Vac
Leakage Current	0.1mA @ 100Vac, 0.2mA @ 240Vac

Output Ratings / Characteristics

Nominal Output Voltage	12Vdc
Output Voltage Tolerance	± 1% (initial set point tolerance from factory)
Output Voltage Adjustment Range	10.8-13.2Vdc
Output Current	4.30A
Output Power	51.6W
Line Regulation	< 48mV
Load Regulation	< 100mV
Ripple (20MHz)	< 120mVpp @ 0°C to 50°C, < 160mVpp @ -10°C to 0°C
Ripple Noise (20MHz)	< 150mVpp @ 0°C to 50°C, < 180mVpp @ -10°C to 0°C
Start-up Time	500ms typ. @ 100Vac
Hold-up Time	20ms typ. @ 100Vac
Dynamic Response (Overshoot & Undershoot O/P Voltage)	± 5% @ 0-50% load and 50-100% load
Start-up with Capacitive Loads	8,000μF Max

Mechanical

Case Cover / Chassis		SGCC
Dimensions	Open frame Enlosed	132 x 50 x 26.6 mm (5.19 x 1.96 x 1.05 inch) 162 x 60 x 36 mm (6.37 x 2.36 x 1.41 inch)
Unit Weight	Open frame Enlosed	0.16 kg (0.35 lb) 0.28 kg (0.62 lb)
Indicator		NA
Cooling System		Convection
Terminal	Input	JST B3P5-VH (LF)(SN)
	Output	JST B4P-VH (LF)(SN)
Wire		AWG 22-18

PJ Open Frame Power Supply
12V 50W 1 Phase / PJ-12V50W□NA

Environment

Surrounding Air Temperature	Operating	-10°C to +70°C
	Storage	-25°C to +75°C
Power De-rating	Mounting Orientation A	> 50°C de-rate power by 2.5% / °C < 90Vac de-rate power by 2% / V
Operating Humidity		5 to 95% RH (Non-Condensing)
Operating Altitude		0 to 5,000 Meters (16,400 ft.)
Shock Test (Non-Operating)		IEC 60068-2-27, 196.1m/S² (20G),11ms, once along X, Y, and Z axis
Vibration (Operating)		IEC 60068-2-6, 10Hz to 55Hz @ 19.6m/S² (2G); 3 min period, 60 min per axis for all X, Y, Z direction

Protections

Overvoltage	13.8-16.8V, Latch Mode
Overload / Overcurrent	> 105% of rated load current, Hicc-up Mode, Non-Latching (Auto-Recovery)
Over Temperature	Latch Mode
Short Circuit	Hicc-up Mode, Non-Latching (Auto-Recovery when the fault is removed)
Protection Against Shock	Class I with PE* connection

*PE: Primary Earth

Reliability Data

MTBF	> 200,000 hrs. as per JEITA RCR-9102B
Expected Cap Life Time	10 years (115Vac, 50% load @ 40°C)

Safety Standards / Directives

Electrical Safety		TUV Bauart to EN 60950-1, UL/cUL recognized to UL 60950-1 and CSA C22.2 No. 60950-1 (File No. E131881), CB scheme to IEC 60950-1
ITE		IEC 60950-1
CE		In conformance with EMC Directive 2014/30/EU and Low Voltage Directive 2014/35/EU
Material and Parts		RoHS Directive 2011/65/EU Compliant
Galvanic Isolation	Input to Output	3.0KVac
	Input to Ground	2.0KVac
	Output to Ground	0.5KVac

PJ Open Frame Power Supply
12V 50W 1 Phase / PJ-12V50W□NA

EMC

EMC / Emissions		CISPR 32, EN 55032, FCC Title 47: Class B
Immunity to		
Electrostatic Discharge	IEC 61000-4-2	Level 4 Criteria A[1)] Air Discharge: 15kV Contact Discharge: 8kV
Radiated Field	IEC 61000-4-3	Level 3 Criteria A[1)] 80MHz-1GHz, 10V/M with 1kHz tone / 80% modulation
Electrical Fast Transient / Burst	IEC 61000-4-4	Level 3 Criteria A[1)] 2kV
Surge	IEC 61000-4-5	Level 3 Criteria A[1)] Common Mode[2)]: 2kV Differential Mode[3)]: 1kV
Conducted	IEC 61000-4-6	Level 3 Criteria A[1)] 150kHz-80MHz, 10Vrms
Power Frequency Magnetic Fields	IEC 61000-4-8	Criteria A[1)] Magnetic field strength 30A/Meter
Voltage Dips	IEC 61000-4-11	100% dip; 1 cycle (20ms); Self Recoverable
Low Energy Pulse Test (Ring Wave)	IEC 61000-4-12	Level 3 Criteria A[1)] Common Mode[2)]: 2kV Differential Mode[3)]: 1kV
Harmonic Current Emission		IEC/EN 61000-3-2, Class A
Voltage Fluctuation and Flicker		IEC/EN 61000-3-3

1) Criteria A: Normal performance within the specification limits
2) Asymmetrical: Common mode (Line to earth)
3) Symmetrical: Differential mode (Line to line)

Block Diagram

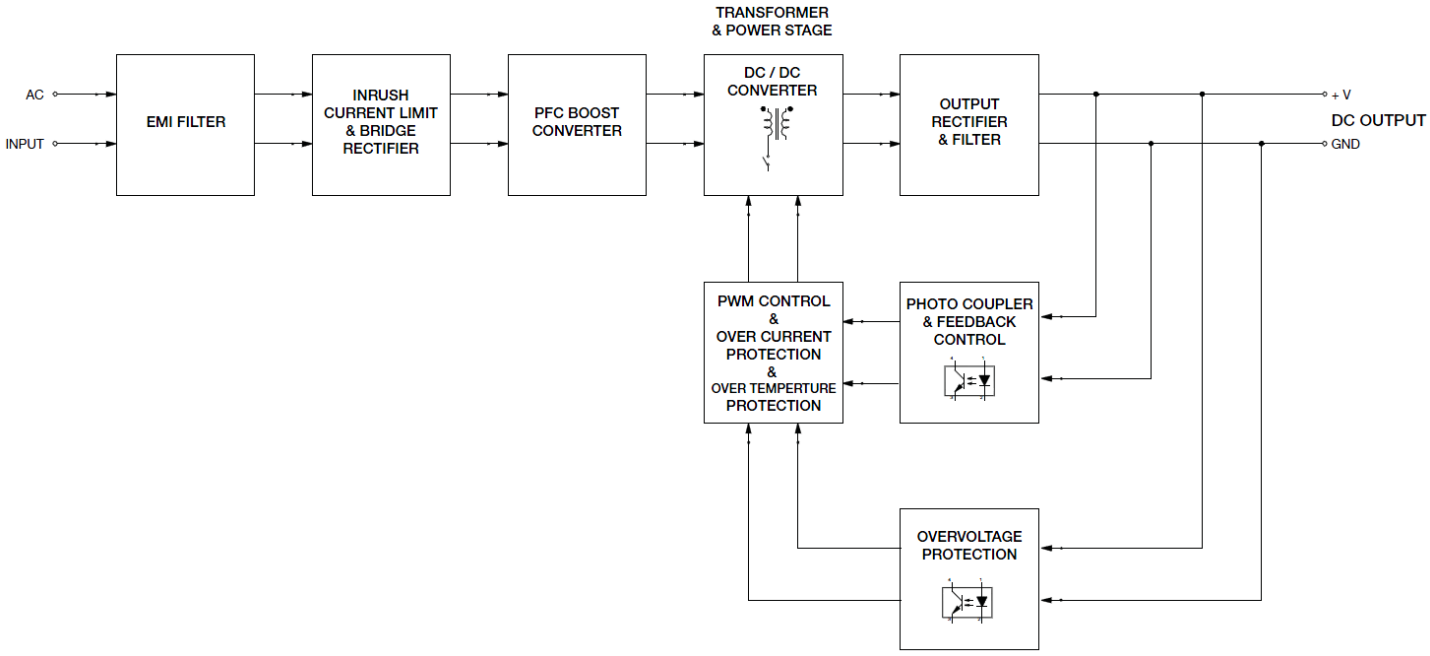

All parameters are specified at 25°C ambient and AC input unless otherwise indicated.
www.DeltaPSU.com (November 2018, Rev. 03)

PJ Open Frame Power Supply
12V 50W 1 Phase / PJ-12V50W□NA

Dimensions

L x W x D: 132 x 50 x 26.6 mm (Open Frame)

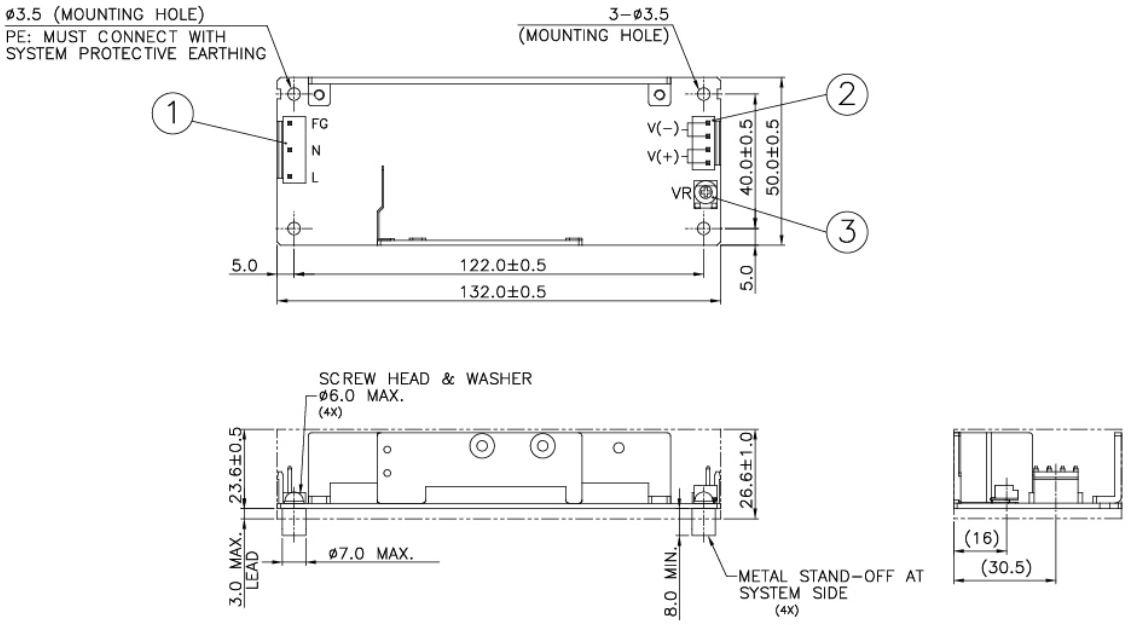

L x W x D: 162 x 60 x 36 mm (L Frame)

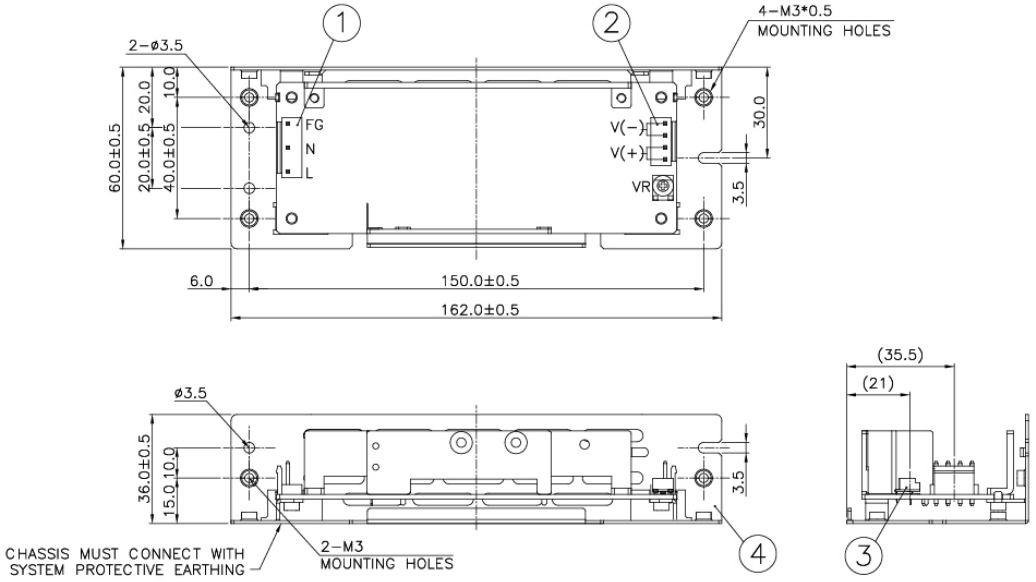

Item	Device Description
1	Input Connector
2	Output Connector
3	VR
4	Chassis

Notes

- Dimensions are in mm
- For information on Mounting Torque, and I/O Connector and Housing, please refer to Table 1 (Page 6).
- For L Frame type: There are 6 threaded mounting holes and 5 normal mounting holes.
- For Open Frame type: There are 4 normal mounting holes.

All parameters are specified at 25°C ambient and AC input unless otherwise indicated.

PJ Open Frame Power Supply
12V 50W 1 Phase / PJ-12V50W□NA

L x W x D: 162 x 60 x 36 mm (Enclosed)

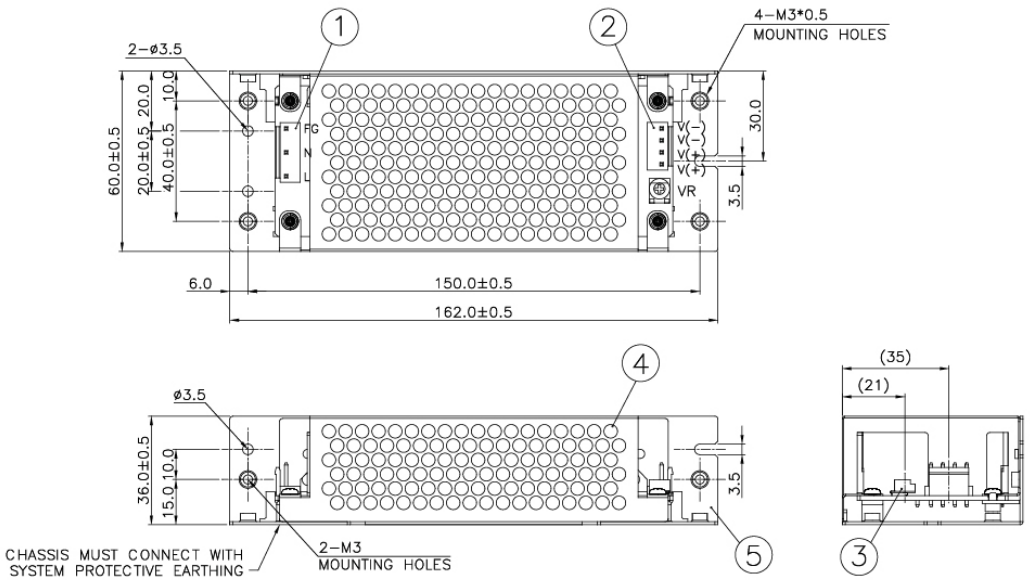

Item	Device Description
1	Input Connector
2	Output Connector
3	VR
4	Cover
5	Chassis

Notes

- Dimensions are in mm
- For information on Mounting Torque, and I/O Connector and Housing, please refer to Table 1 (Page 6).
- For Enclosed type: There are 6 threaded mounting holes and 5 normal mounting holes.

Assembly & Installation

Assembly Reference

■ Open Frame

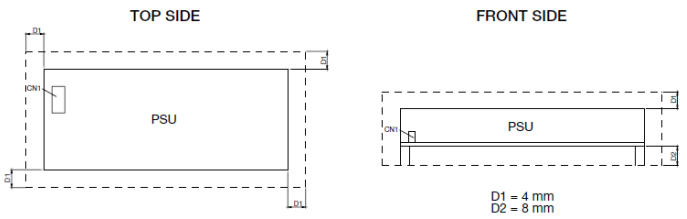

■ L Frame / Enclosed

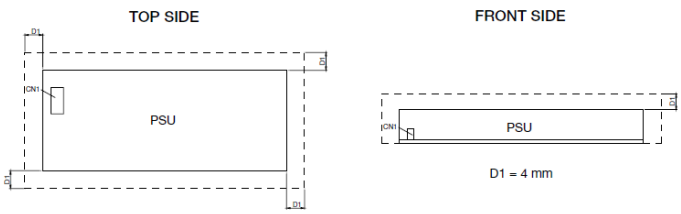

For safety reasons, please ensure the mounted device is kept at ≥ 4mm safety distance at all sides from other components and equipments. **Please insert an insulation sheet between the system and product, if the safety distance is less than 4mm.**

Use flexible cable (stranded or solid) of AWG No. 22-18. Please refer to Table 1 for the recommended Housing and Terminal.

Table 1	Connector (Board Mounting)	Housing	Terminal
Input (JST)	B3P5-VH(LF)(SN)	VHR-5N	SVH-21T-P1.1
Output (JST)	B4P-VH(LF)(SN)	VHR-4N	

PJ Open Frame Power Supply
12V 50W 1 Phase / PJ-12V50W□NA

Mounting Orientation

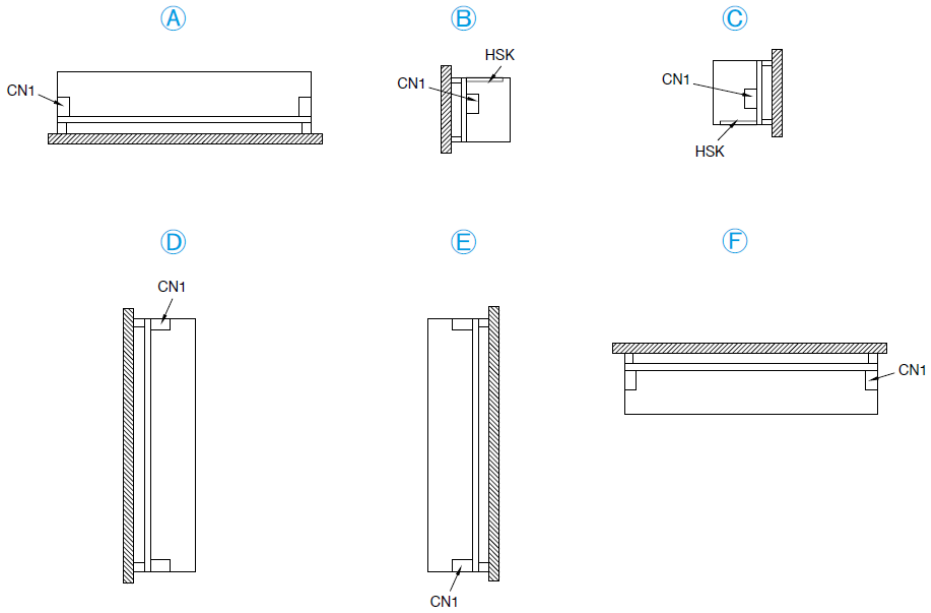

- Any excessive twisting or bending may damage the device's PCB. Please handle the device with care.
- The device is not recommended to be placed on low thermal conductive surfaces. For example, plastics.
- Prevent any foreign metal, particles or conductors from entering the device through the openings during installation. It may cause: -Electric shock; Safety hazard; Product failure.
- **The power supply must be mounted by metal screws onto a grounded metal surface. It is highly recommended that the Earth terminal on the connector be connected to the grounded metal surface.**

Engineering Data

Convection

■ Open Frame / L Frame

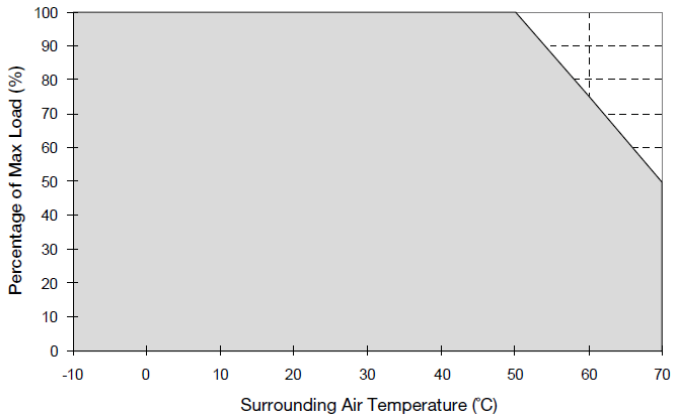

Fig.1.1 De-rating for Mounting Orientation A to F
> 50°C de-rate power by 2.5% / °C

■ Enclosed

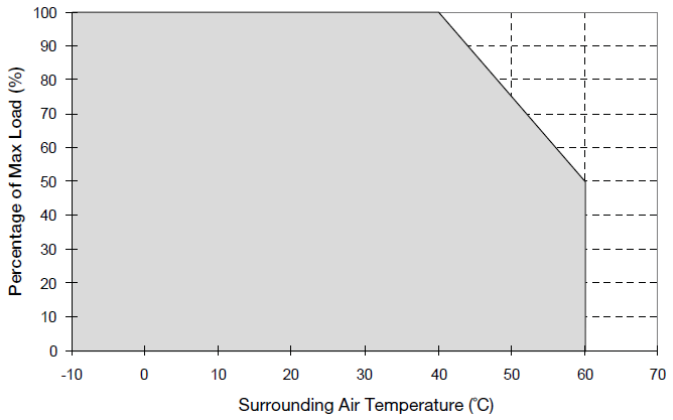

Fig.1.2 De-rating for Mounting Orientation A to F
> 40°C de-rate power by 2.5% / °C

PJ Open Frame Power Supply
12V 50W 1 Phase / PJ-12V50W□NA

Forced Cooling (Air Velocity > 0.7m/s)

■ Air Flow Direction

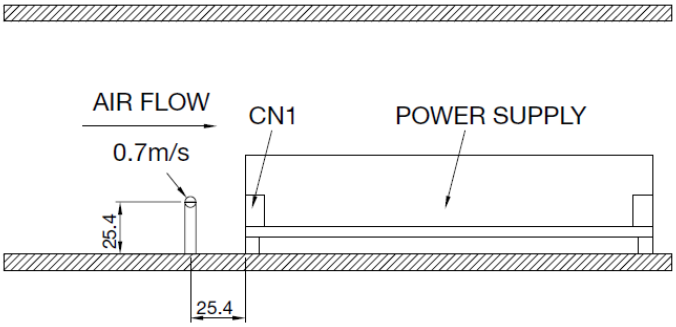

■ Open Frame / L Frame

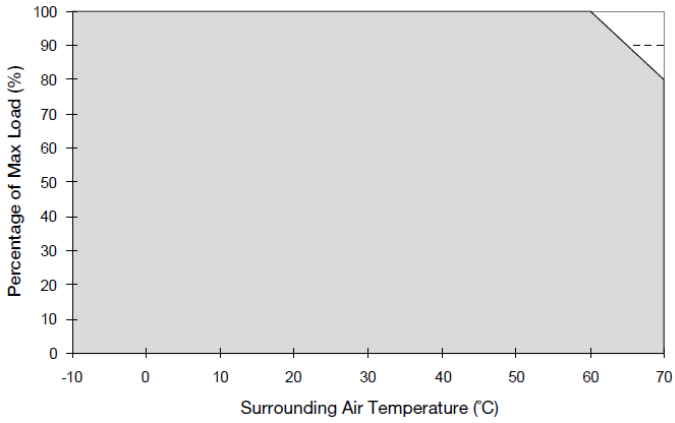

Fig.1.3 De-rating for Mounting Orientation A to F
> 60°C de-rate power by 2% / °C

■ Enclosed

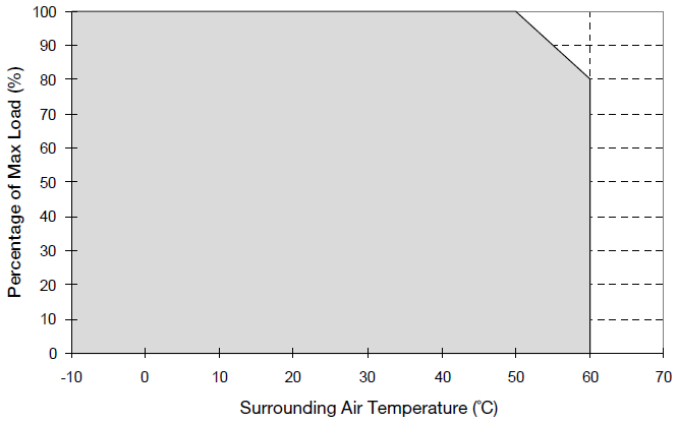

Fig.1.4 De-rating for Mounting Orientation A to F
> 50°C de-rate power by 2% / °C

Notes

1. Power supply components may degrade, or be damaged, when the power supply is continuously used outside the shaded region, refer to the graphs shown above.
2. If the output capacity is not reduced when the surrounding air temperature is more than the upper limit temperature, the device will run into Over Temperature Protection. When activated, the output voltage will go into latch mode until the mains is reapplied and the surrounding air temperature drops to its normal operating temperature.
3. Depending on the surrounding air temperature and output load delivered by the power supply, the device housing can be very hot!
4. If the device has to be mounted in any other orientation, please do not hesitate to contact **info@deltapsu.com** for more details.

Output De-rating VS. Input Voltage

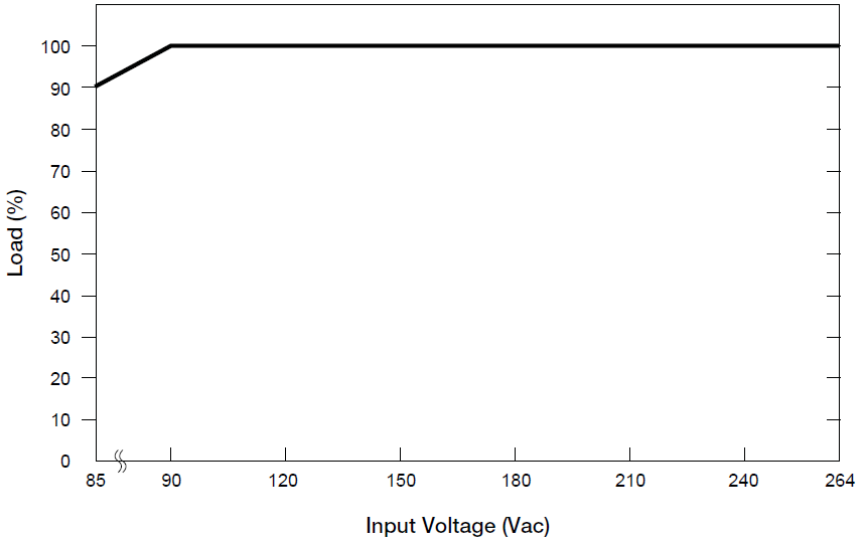

■ No output power de-rating for the input voltage range from 90Vac to 264Vac

Functions

Start-up Time

The time required for the output voltage to reach 90% of its final steady state set value, after the input voltage is applied.

Rise Time

The time required for the output voltage to change from 10% to 90% of its final steady state set value.

Hold-up Time

Time between the collapse of the AC input voltage, and the output falling to 95% of its steady state set value.

■ **Graph illustrating the Start-up Time, Rise Time, and Hold-up Time**

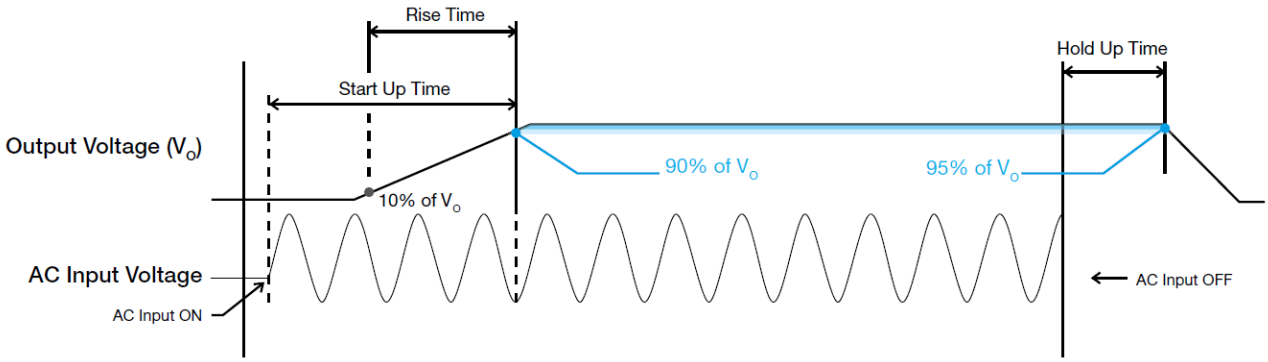

PJ Open Frame Power Supply
12V 50W 1 Phase / PJ-12V50W□NA

Dynamic Response

The power supply output voltage will remain within ±5% of its steady state value, when subjected to a dynamic load from 0 to 50% and 50 to 100% of its rated current.

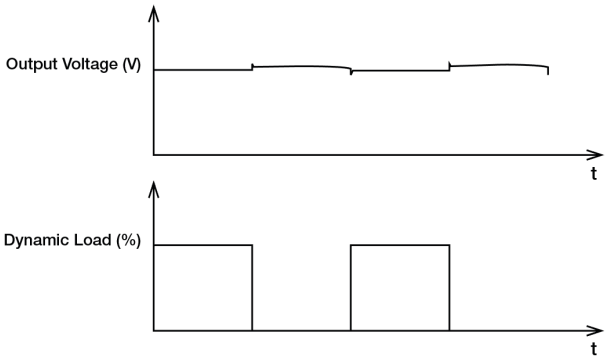

Inrush Current

Inrush current is the peak, instantaneous, input current measured and, occurs when the input voltage is first applied. For AC input voltages, the maximum peak value of inrush current will occur during the first half cycle of the applied AC voltage. This peak value decreases exponentially during subsequent cycles of AC voltage.

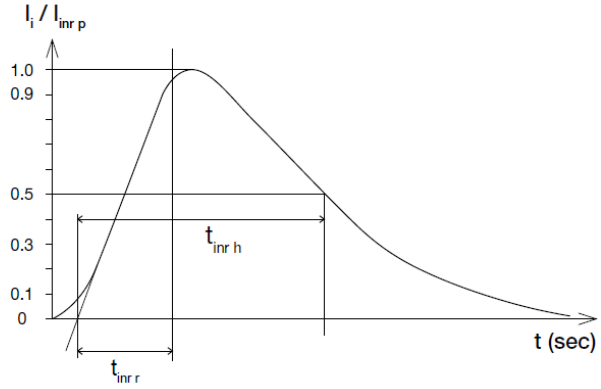

Overvoltage Protection

The power supply's overvoltage circuit will be activated when its internal feedback circuit fails. The output voltage shall not exceed its specifications defined on Page 3 under "Protections". **The power supply should be latch.**

Short Circuit Protection

The power supply's output OLP/OCP function also provides protection against short circuits. When a short circuit is applied, the output current will operate in "Hiccup mode", as shown in the illustration in the OLP/OCP section on this page. The power supply will return to normal operation after the short circuit is removed.

Overload & Overcurrent Protections

The power supply's Overload (OLP) and Overcurrent (OCP) Protections will be activated when output current exceeds 105% of I_O (Max load). In such occurrence, the V_O will start to droop and once the power supply has reached its maximum power limit, the protection is activated and the power supply will go into "Hiccup mode" (Auto-Recovery). The power supply will recover once the fault condition of the OLP and OCP is removed and I_O is back within the specifications.

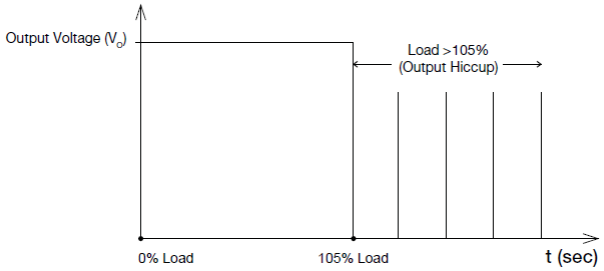

Additionally, if the I_O is <105% but >100% for a prolong period of time (depending on the load), the Over Temperature Protection (OTP) will be activated due to high temperature on critical components. The power supply will then go into latch mode until the fault is removed and the mains is reapplied.

Over Temperature Protection

As mentioned above, the power supply also has Over Temperature Protection (OTP). This is activated when the overload condition persists for an extended duration and the output current is below the overload trigger point but >100% load. In the event of a higher operating condition at 100% load, the power supply will run into OTP when the surrounding air temperature is higher than the operating temperature. When activated, the output voltage will go into latch mode until the mains is reapplied and the surrounding air temperature drops to its normal operating temperature.

Others

Delta RoHS Compliant

Restriction of the usage of hazardous substances

The European directive 2011/65/EU limits the maximum impurity level of homogeneous materials such as lead, mercury, cadmium, chrome, polybrominated flame retardants PBB and PBDE for the use in electrical and electronic equipment. RoHS is the abbreviation for “Restriction of the use of certain hazardous substances in electrical and electronic equipment”.

This product conforms to this standard.

Conformal Coating

The Protective Coating Technology

Delta Electronics Group has designed the perfect dipping technique which penetrates everywhere including under device, and prevents leakage. The conformal coating dipping can be applied to PCBs or circuit board. The coating preserves the performance of precision electronic primarily by preventing ionizable contaminants such as salt from reaching circuit nodes, where the material slumps around sharp edges. This can be a problem especially in highly conversing atmosphere.

Attention

Delta provides all information in the datasheets on an “AS IS” basis and does not offer any kind of warranty through the information for using the product. In the event of any discrepancy between the information in the catalog and datasheets, the datasheets shall prevail (please refer to www.DeltaPSU.com for the latest datasheets information). Delta shall have no liability of indemnification for any claim or action arising from any error for the provided information in the datasheets. Customer shall take its responsibility for evaluation of using the product before placing an order with Delta.

Delta reserves the right to make changes to the information described in the datasheets without notice.

TS Connect AB / Power Outlet
Fagerstagatan 9
163 53 Spånga, Sweden

Phone: +46 8 795 93 10
Mail: sales@power-outlet.com

Web: www.power-outlet.com
Web: www.tsconnect.se