Features

- Supply Voltage: 90-305Vac or 127-420Vdc, 380Vac for 2 hours
- Great Surge Immunity 10kV
- PWM Output Frequency >1kHz
- 100,000Hour Life @ Tc=75°C
- 7 Year Warranty @ Tc<=75°C
- High Quality 105°C Longlife Capacitors
- 0-10V/PWM/DALI /Push (Switch) /DMX (RDM) Dimmable
- 2% Minimum Dimming Output
- Dim Off with 0.5W Standby
- 12V 300mA Auxiliary Power to Power Controllers and Fans (Optional)
- Input Over Voltage Protection (Optional)
- Class II Model Available
- UL Class P, ENEC/CB/CCC SELV Output
- Safety according to EN 61347-1, 61347-2-3, 61347-2-13, 62384

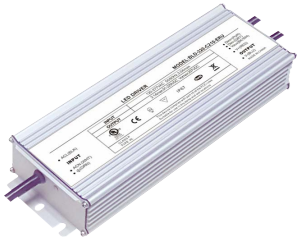

IP67

Application

- {ŭNŽLJ fłƎKŭăΣ [l·yŘăŎl·LJŜ fłƎKŭăΣ . l·è fłƎKŭăΣ {ŭNŜŜŭ fłƎKŭăΣ ¢dzyŷŜf fłƎKŭăΣ Cf22Ř fłƎKŭă

Model List

Model Number	Input Voltage Range	Output Power	Output Voltage	Output Current Min	Output Current Max	Certification
BLTSD-320-V016-XYZ	90 ~ 305 Vac	320 W	16V	0	20A	UL/FCC/CB/ENEC/CCC
BLTSD-320-V024-XYZ	90 ~ 305 Vac	320 W	24V	0	13.3A	UL/FCC/CB/ENEC/CCC
BLTSD-320-V048-XYZ	90 ~ 305 Vac	320 W	48V	0	6.7A	UL/FCC/CB/ENEC/CCC

XY=	Dimming Method	Programmable	12Vaux	Dim-off	Programming Range
NN	-	-	-	-	
TR	Timing	√	-	-	100%-115%Vo
DN	0-10V	-	-	<1.5W	
EN	0-10V	-	√	<0.5W	
ER	0-10V	√	√	<0.5W	100%-115%Vo
AN	DALI	-	-	<1.5W	
MR	DMX	Set Address	- <1.5W		

Z = U, UL cable with ground wire S, VDE cable/Class I D, VDE cable/Class II

Note: Dimmable Drivers Do NOT Support Switching DCDC Regulator as Load

■ **Technical Data**

Input Voltage	90～305Vac or 127V-420Vdc, 380Vac for 2 Hours
Input Frequency	47～63Hz
Power Factor	>0.9 @ 60-100% Load, refer to PF vs. Load
THD	<15% @ 60-100% Load, refer to THD vs. Load Curve
Input Current	2.9A Max @ 120Vac & Full-Load, 1.5A Max @ 220Vac & Full-Load
Inrush Current	65A peak, 1.2ms duration, <0.25A 2s @ 230Vac, Cold Start 70A peak, 1.3ms duration, <0. 5A 2s @ 277Vac, Cold Start
Leakage Current	1mA Max @ 277Vac 60Hz, UL8750, 0.75mA Max @ 220Vac 50Hz, IEC61347-1
Input Under Voltage	Shut Down and Auto-Restart
Input Over Voltage	*Optional: Shutdown @ 320Vac
Surge Protection	Line to Line 6kV, Line to Ground 10kV, IEC 61000-4-5
Voltage Accuracy	±3% Vo
Setup Time	1.2s Max.
Overshoot	10% Vo, Max.
Output Over Current	120% Io, Typ.
Short Circuit	Auto Recovery. The output recovers when short is removed.
Over Temperature	Turn off the output when Tc ≧ 105 ±10℃; Auto Recovery When Tc ≦ 70 ±10℃
Operating Temperature	-40℃～+70℃； 10%RH～100%RH
Storage Temperature	-40℃～+85℃； 5%RH～100%RH
MTBF	≥320,000 Hours, 75℃ Case Temperature (MIL-HDBK-217F)
Lifetime	≥100,000 Hours, 75℃ Case Temperature, refer to life vs. Tc Curve
Case Temperature	90℃ Max, Marked in the Tc point of Label
Dimension 12V Models	8.82 x 3.54 x 1.63 by Inch (body), 9.88 x 3.54 x 1.63 by Inch (Endcaps Included)
	224.0 x 90 x 41.5 by mm (body), 251.0 x 90 x 41.5 by mm (Endcaps Included)
Net Weight	1600g
Packing	12pcs/Carton/21,3kg, 490 x 370 x 345 by mm

Notes: Unless specified, all the test results are measured in 25℃ room temperature.

■ Dimming

Parameter	Min.	Typ.	Max.
Vdim Sourcing Current	200uA	300uA	450uA
Vdim Allowed Input Voltage	-20 V		20 V
0-10V Dimming Range	2% (Vdim=1V)	Linear	100% (Vdim=9~10V)
PWM Dimming Range	2% (Duty=10%)	Linear	100% (Duty=90-100%)
Dim off threshold	0.4V or 4%	0.5V or 5%	0.6V or 6%
Dim on threshold	0.6V or 6%	0.7V or 7%	0.8V or 8%
PWM High	3V		10V
PWM Low	0V		0.6V
PWM Frequency	300Hz		2kHz
External PWM Controller Current Sinking Capability	300uA		
DALI Interface Standard		IEC62386	
DA1,DA2 High Level	9.5	16	22.5
DA1,DA2 Low Level	-6.5	0	6.5
DA1,DA2 Current	0		2mA

Dimming Curve

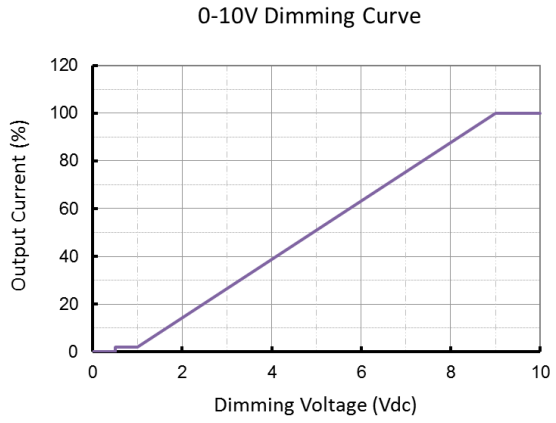

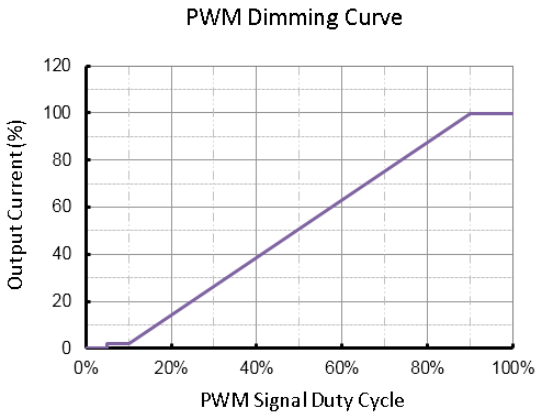

Dimming Wiring

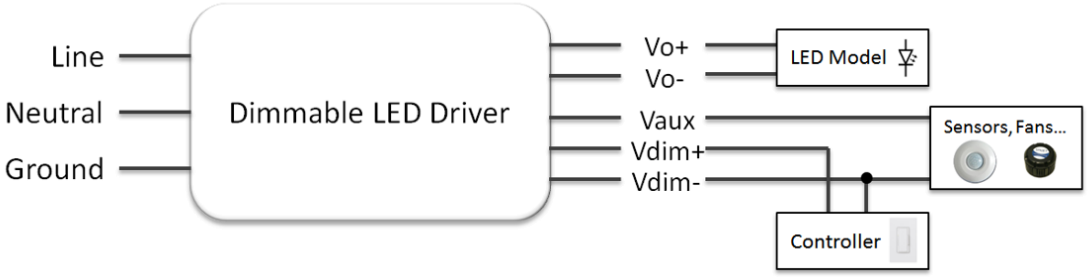

Push (Switch) Dim

A short press (50-600 ms) switches the device on or off
A long press (> 600 ms) fades the connected operating device alternately up and down (between 2 and 100%).
Up and down slew rate is 20% Io/second. Long push for 15s to synchronize.

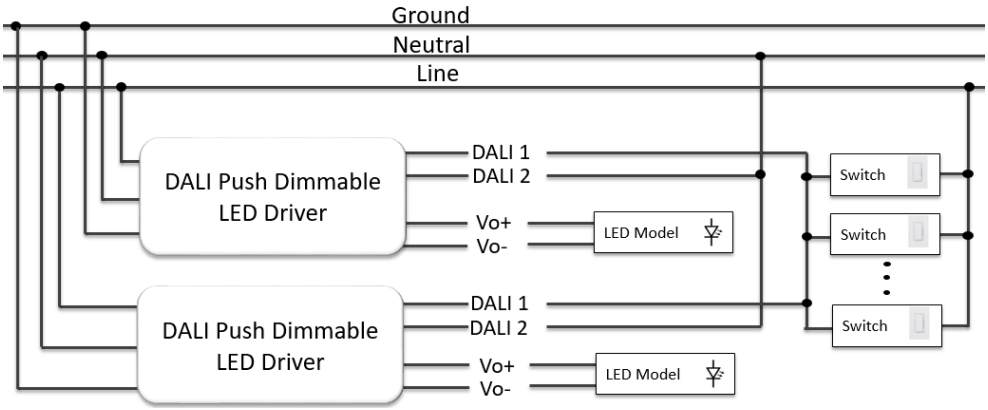

■ Safety/EMC Compliance

Safety Standard	Description
UL8750	Light Emitting Diode(LED) Equipment for use in Lighting Products
UL1012	Power Units other than Class 2
IEC 61347-1	Lamp Control Gear Part 1: General and Safety Requirements
IEC 61347-2-13	Lamp Control Gear Part 2-13: Particular Requirement for DC or AC Supplied Electronic Control Gear for LED Modules
EMI Standards	Description
IEC 55015	Conducted Emission Test & Radiated Emission Test
IEC 61000-3-2	Harmonic Current Emissions; Class C
IEC 61000-3-3	Voltage Fluctuations & Flicker
FCC Part 15	ANSI C63.4:2009 Class B
EMS Standards	Description
IEC 61000-4-2	Electrostatic Discharge (ESD): 8 kV Air Discharge, 4 kV Contact Discharge
IEC 61000-4-3	Radio Frequency Electromagnetic Field Susceptibility Test (RS)
IEC 61000-4-4	Electrical Fast Transient (EFT)
IEC 61000-4-5	Surge Immunity Test
IEC 61000-4-6	Conducted Radio Frequency Disturbances Test (CS)
IEC 61000-4-8	Power Frequency Magnetic Field Test
IEC 61000-4-11	Voltage Dips
IEC 61547	Electromagnetic Immunity Requirements Applies to Lighting Equipment

■ Lifetime vs. Case Temperature

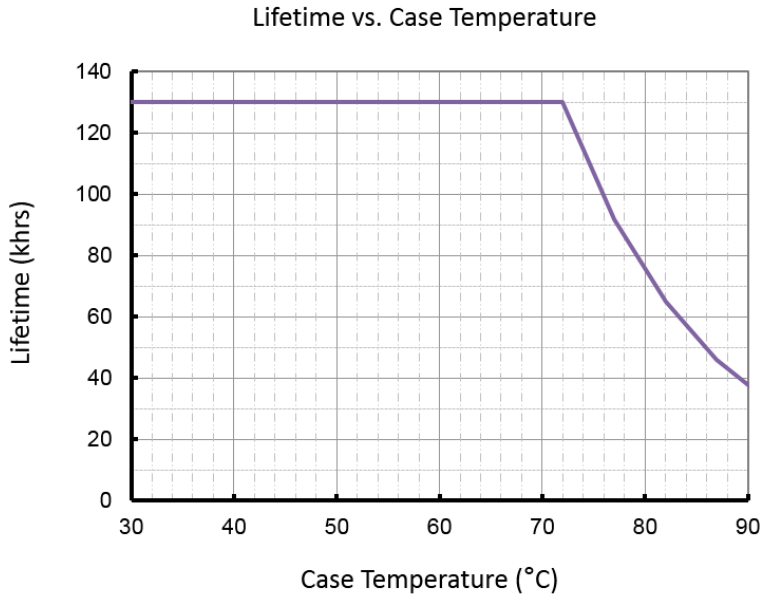

(End of Life: Maximum Failure Rate=10%)

■ Power Factor vs. Load

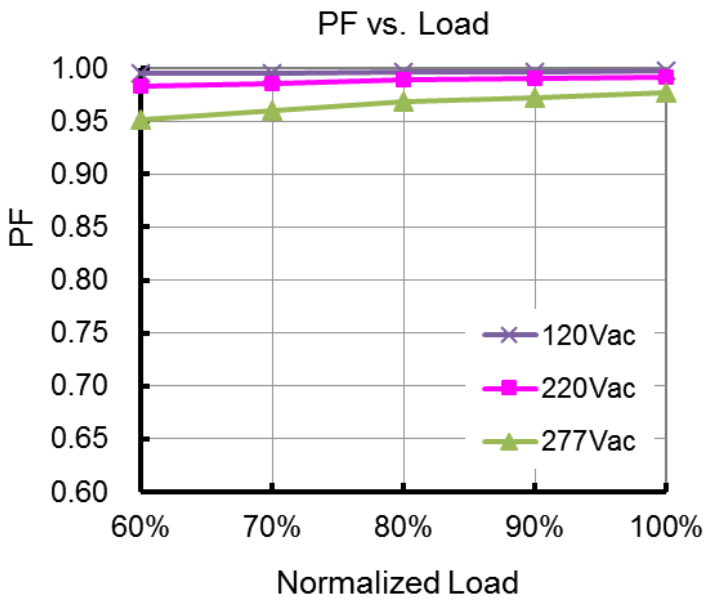

■ THD vs. Load

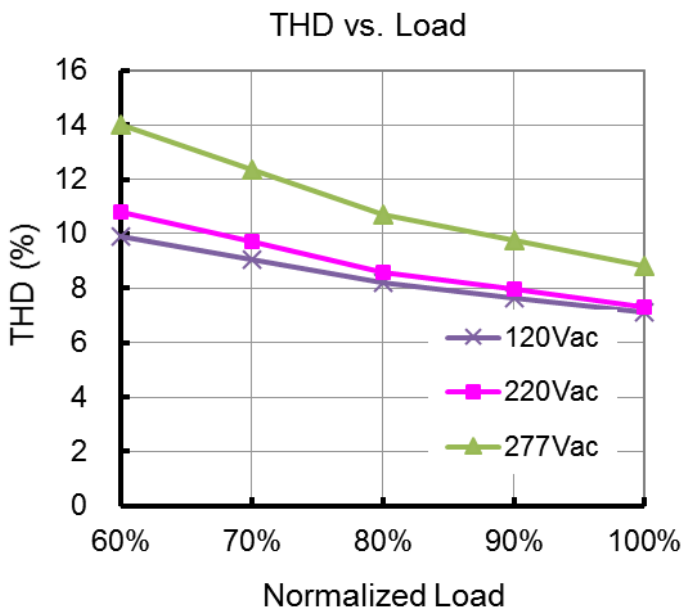

■ Efficiency vs. Load (24V Model)

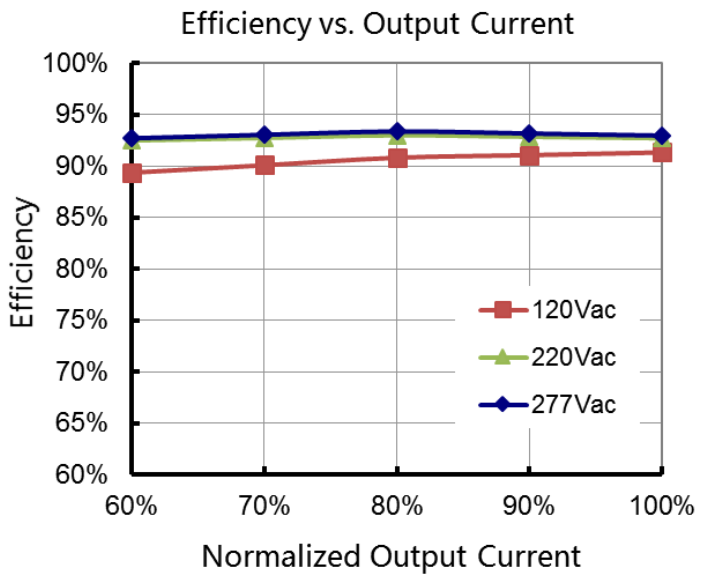

■ Mechanical Design

- BLTSD-320-Vxxx-NNU (UL Cable) 48V model

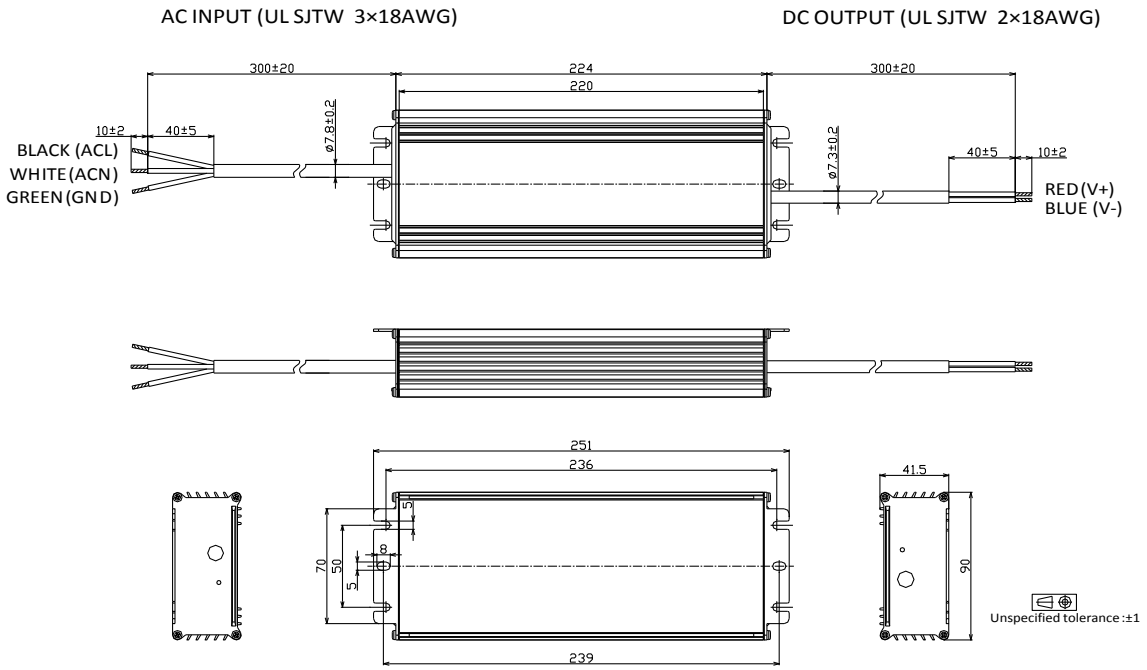

- BLTSD-320-Vxxx-NNU (UL Cable) 24V models

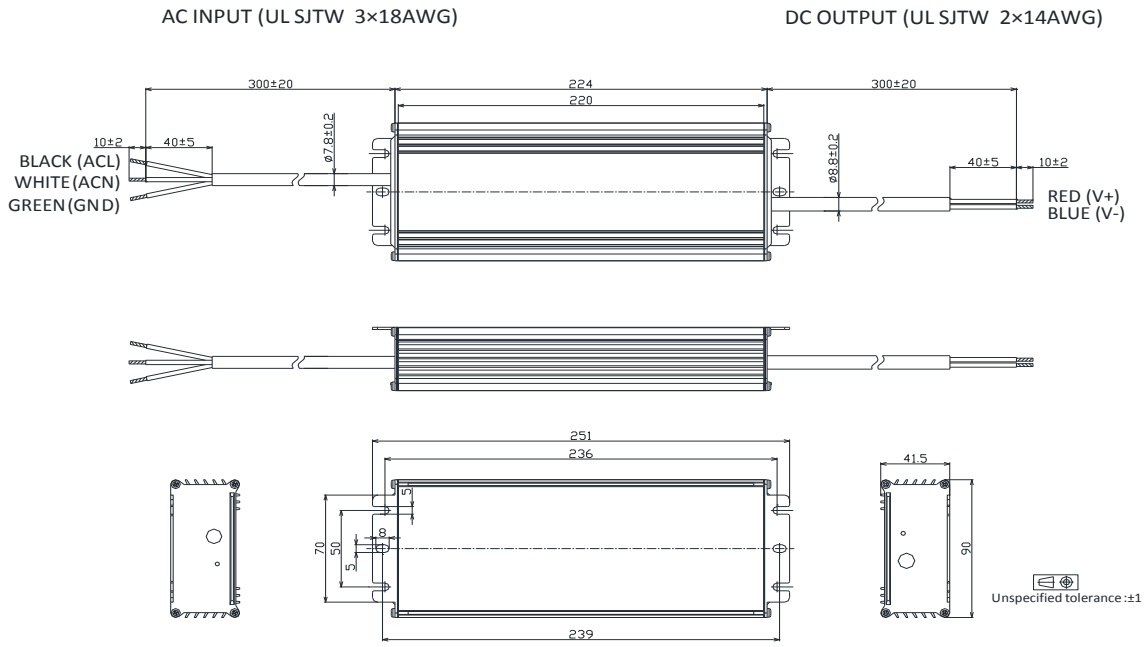

- **BLTSD-320-Vxxx-ENU (UL Cable) 48V model**

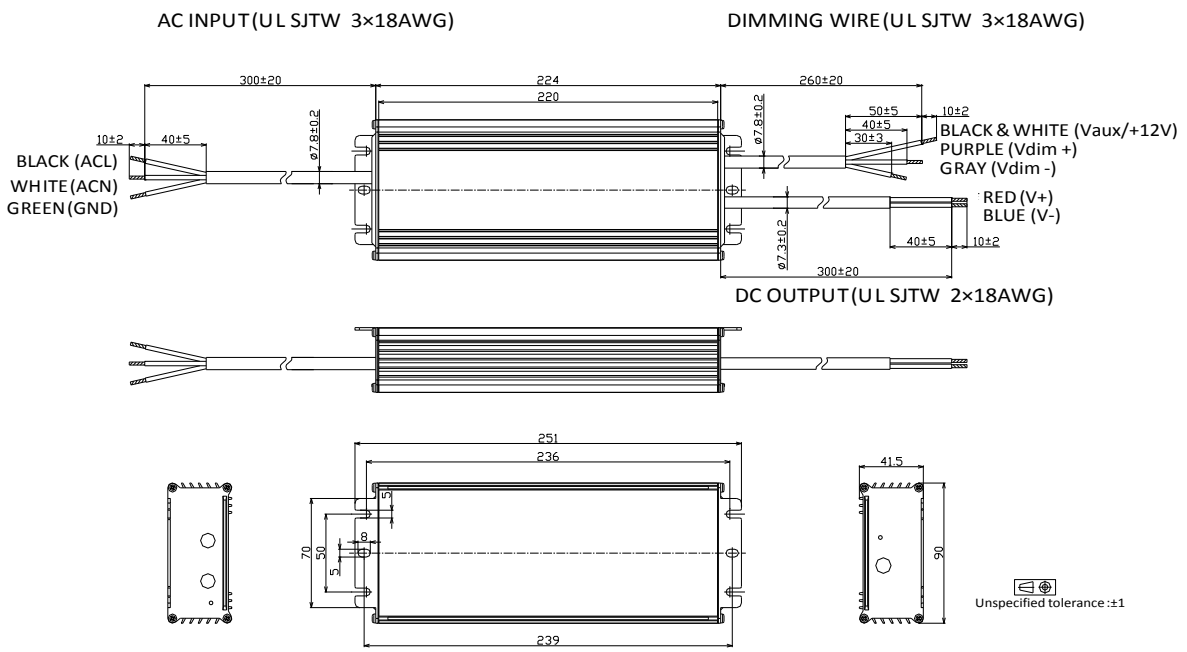

- **BLTSD-320-Vxxx-ENU (UL Cable) 16V 24V models**

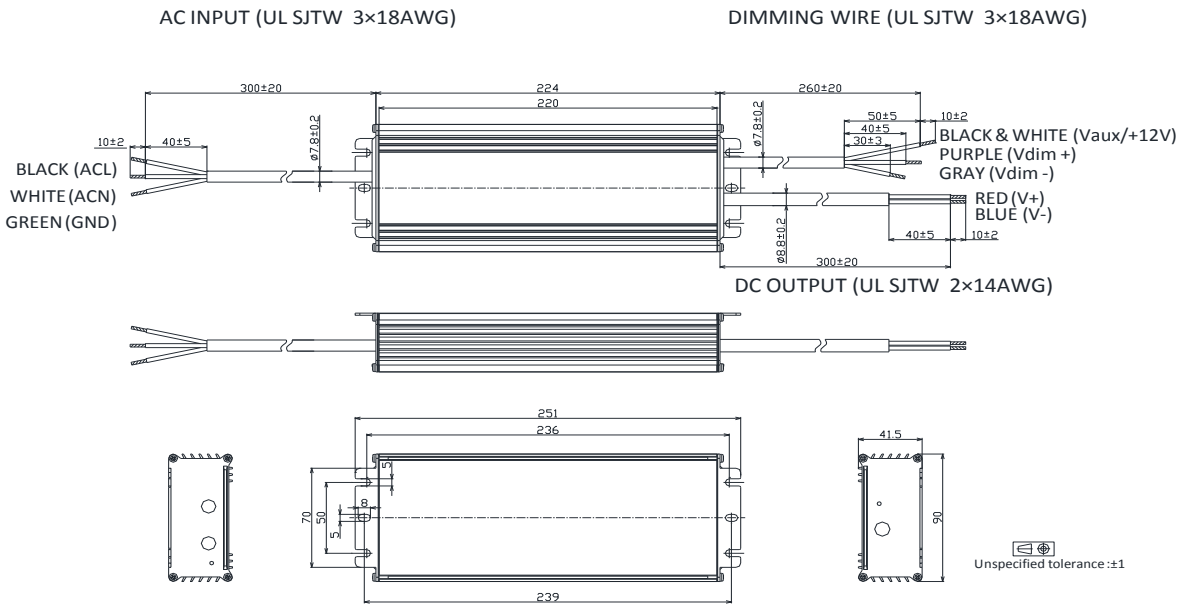

- BLTSD-320-Vxxx-ANU (UL Cable) 48V model

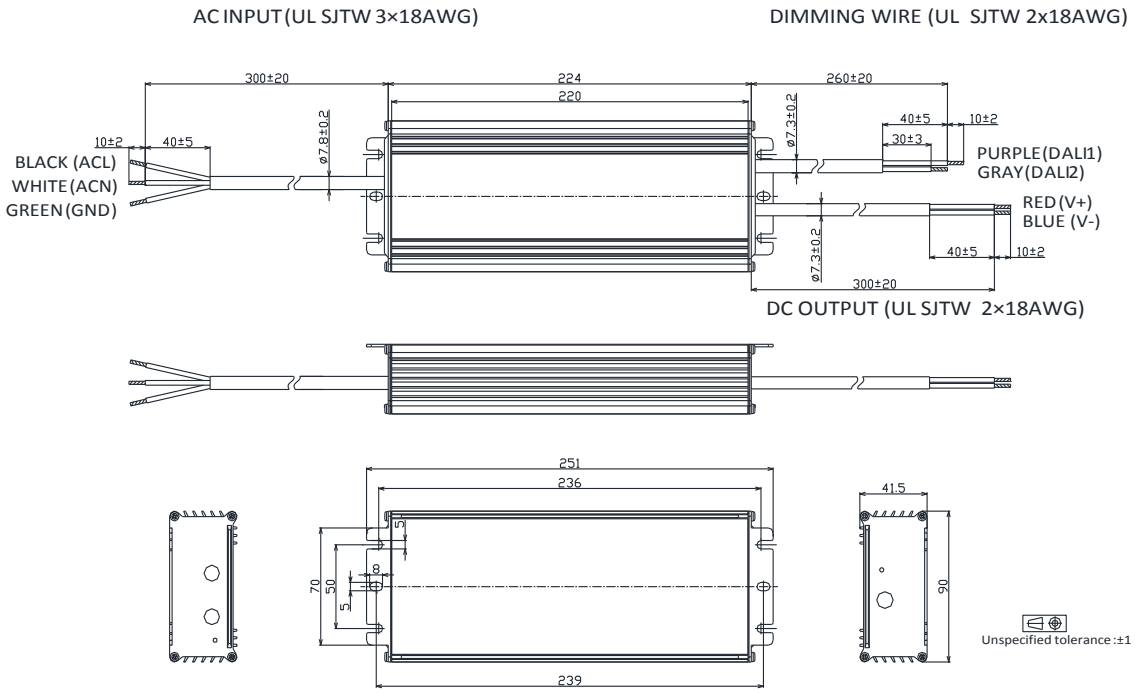

- BLTSD-320-Vxxx-ANU (UL Cable) 16V 24V models

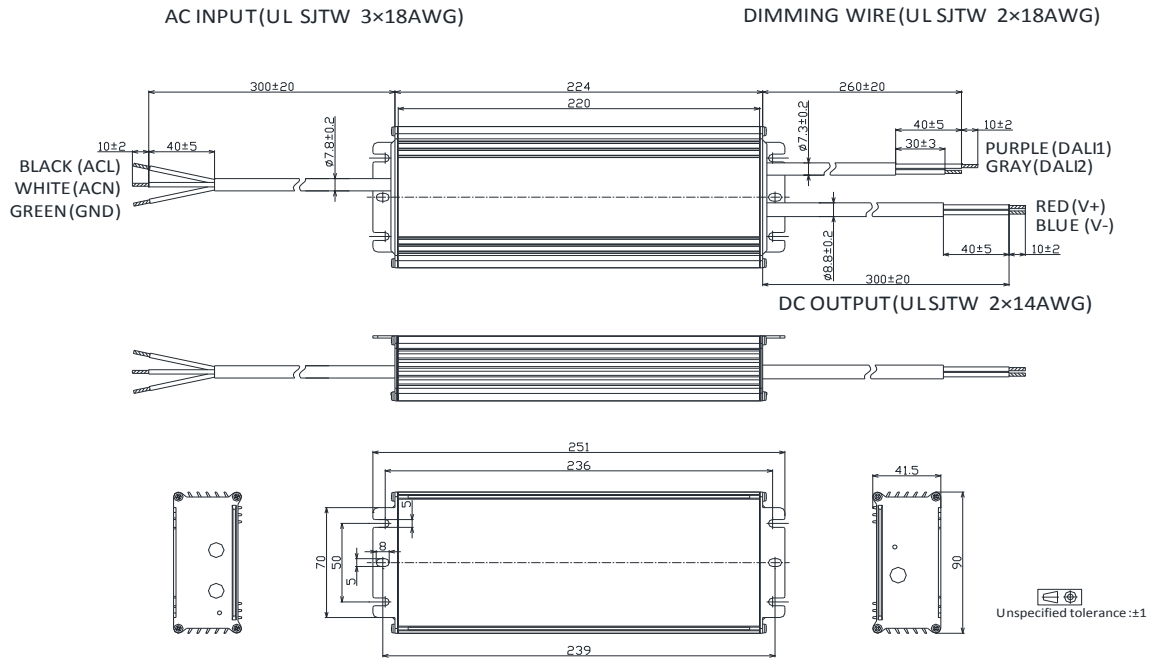

- BLTSD-320-Vxxx-NNS (VDE Cable) 48V model

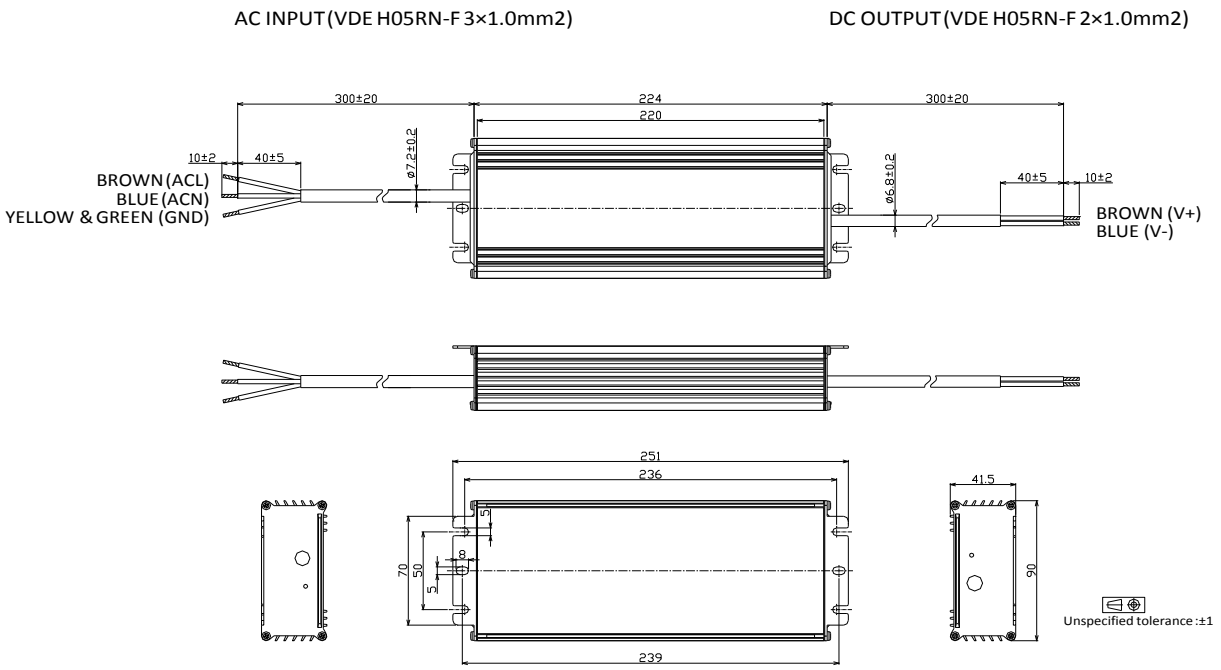

- BLTSD-320-Vxxx-NNS (VDE Cable) 16V 24V models

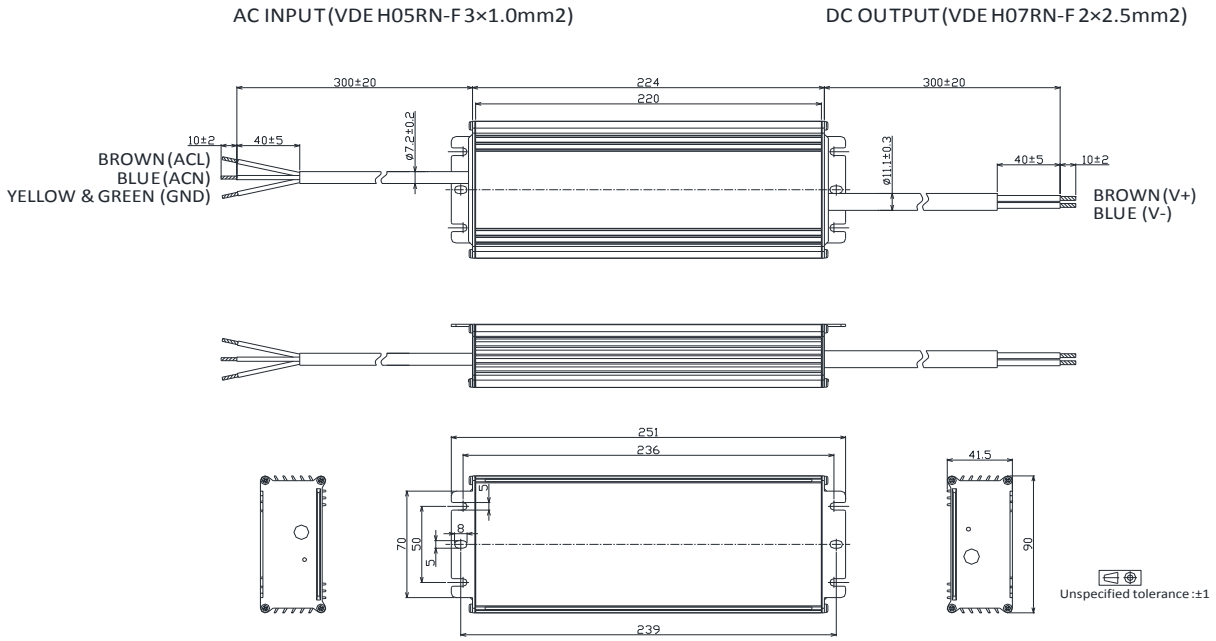

- BLTSD-320-Vxxx-ENS (VDE Cable) 48V

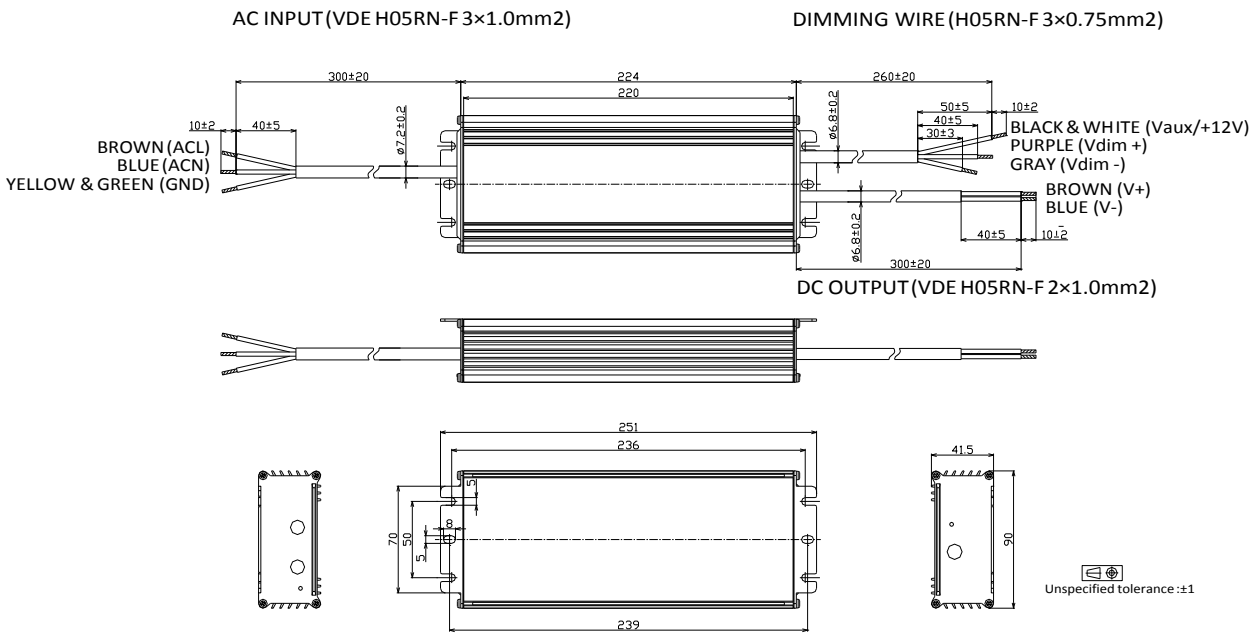

- BLTSD-320-Vxxx-ENS (VDE Cable) 16V 24V models

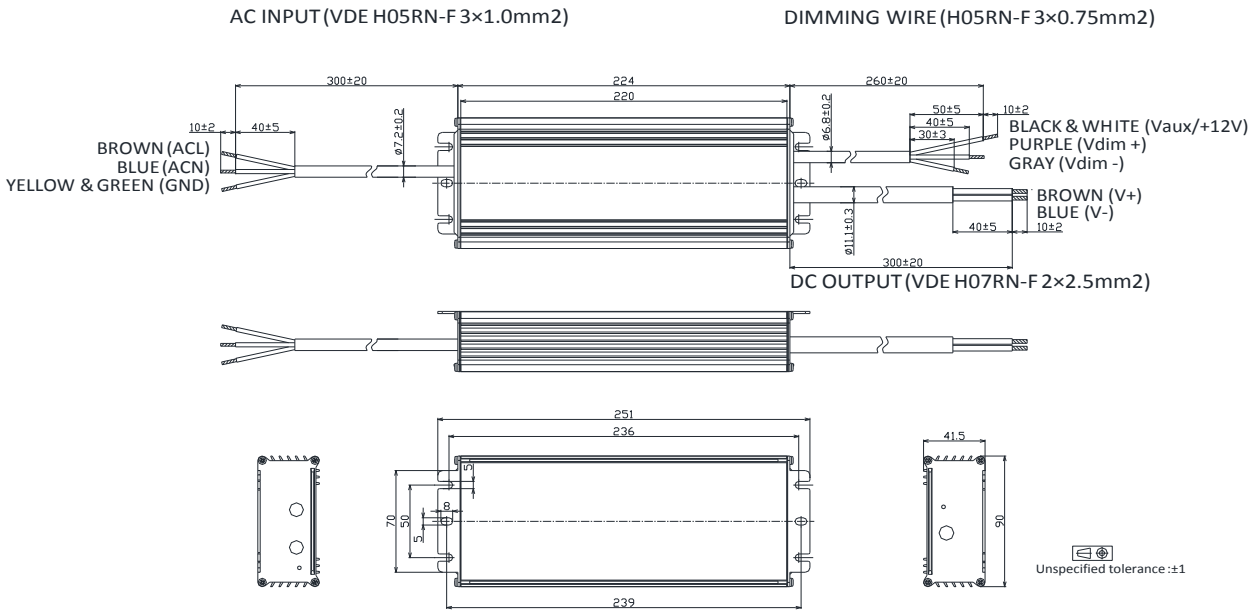

- BLTSD-320-Vxxx-ANS (VDE Cable) 48V model

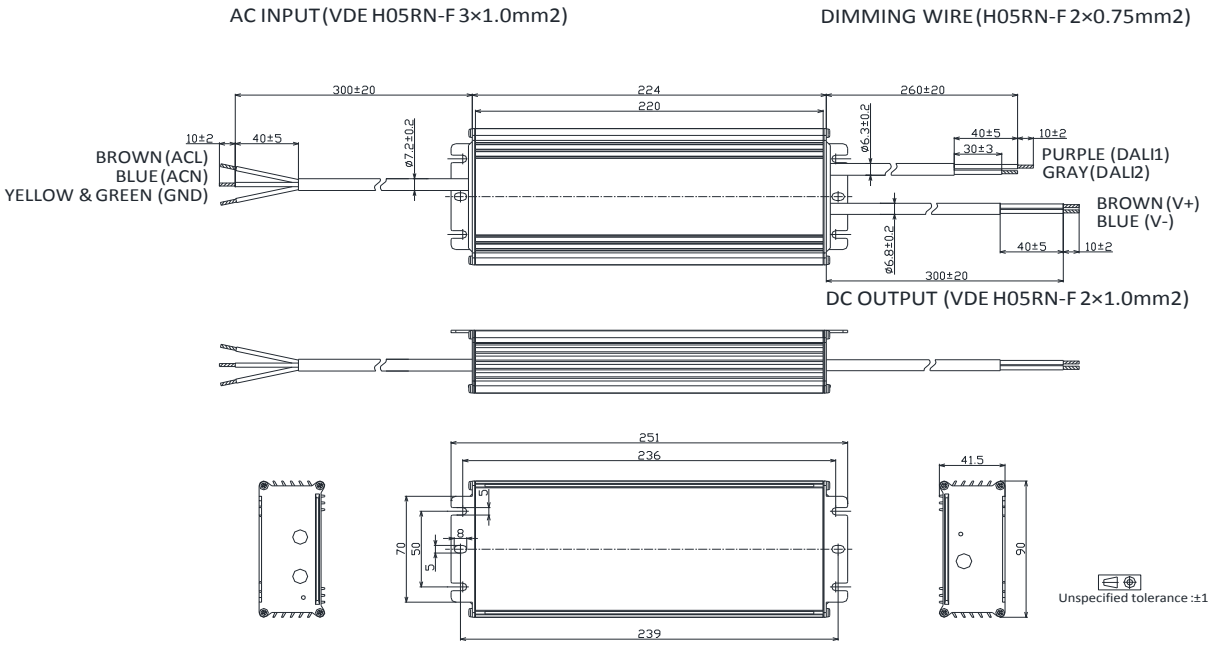
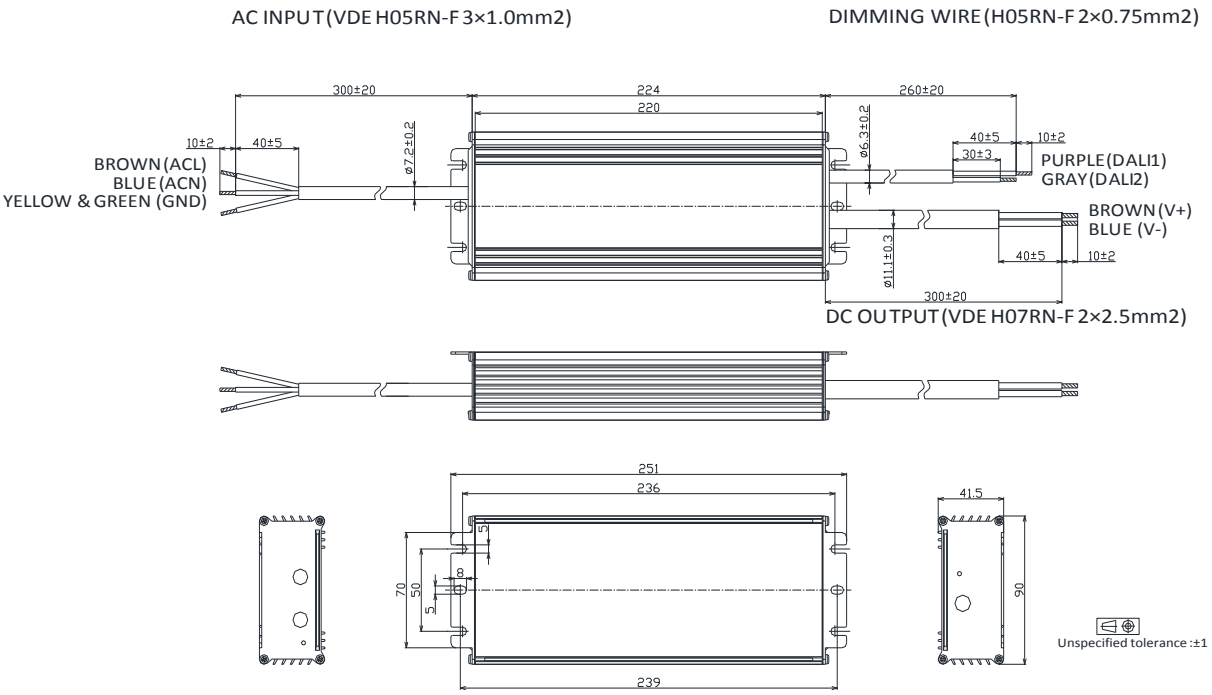
- BLTSD-320-Vxxx-ANS (VDE Cable) 16V 24V models